INFRATECH
COMFORT

INSTALLATION USE & CARE MANUAL

ALL WEATHER SL-SERIES QUARTZ TUBE ELECTRIC INFRARED RADIANT HEATER

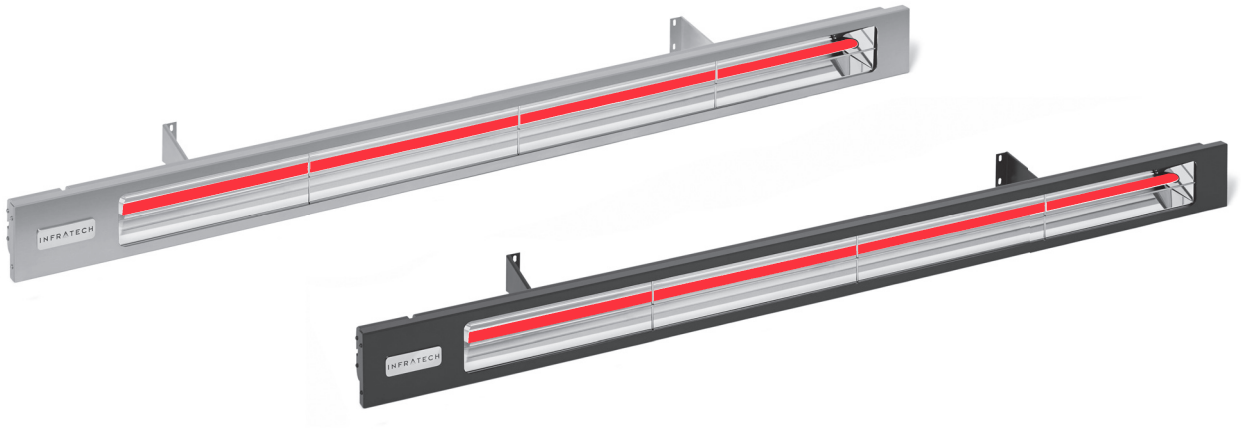

TABLE OF CONTENTS

Warnings	2
Installation Instructions	3
Wiring Instructions	3
Mounting Instructions	4 - 5
Replacement Element Installation	5
Replacement Parts	5 - 6
Heater Coverage Areas	6
General Notes	6
Maintenance Instructions	6
Trouble Shooting	7
Location Suggestions	7
Warranty	8

PROUDLY MADE IN USA

SAVE THIS MANUAL FOR FUTURE REFERENCE

c UL us LISTED

WARNINGS

READ ALL INSTRUCTIONS BEFORE USING HEATER

Unit may be a source of possible shock. NEVER attempt to service heater without disconnecting its power source. Source of possible ignition.

CAUTION

High Temperature, risk of fire, keep electrical cords, drapery, furnishings and other combustibles at least 3' (0.9m) from the front of heater and away from sides and rear.

MOUNTING HEIGHT/CLEARANCES

CLEARANCE FROM COMBUSTIBLES

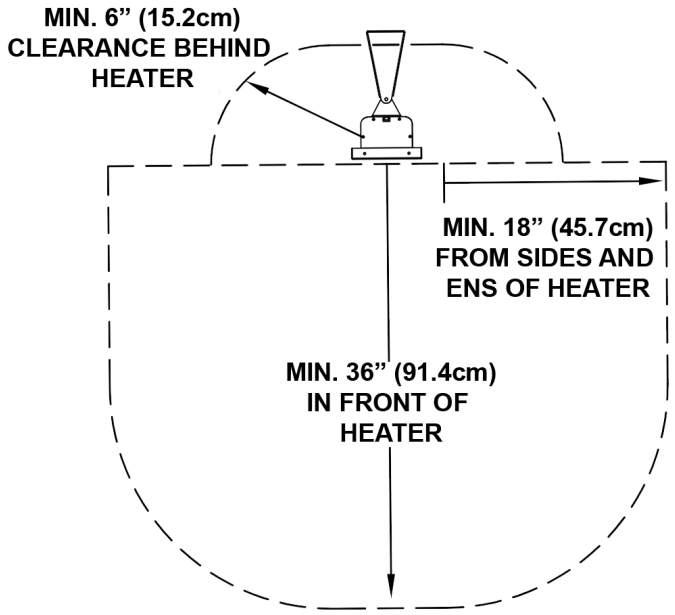

- For Wall-Mounting, do not install heater closer than 18" (45.7cm) from adjacent walls and 6" (15.2cm) from ceiling and do not install less than 6' (1.8 m) if the heater is labeled as UL Listed and 8' (2.4m) if the heater is labeled as UL/CUL Listed from floor, while heater is set at a downward angle of 30 to 60 degrees.
- For Ceiling-Mounting, do not install heater closer than 18" (45.7cm) from adjacent walls and 6" (15.2cm) from ceiling and do not install less than 6' (1.8 m) if the heater is labeled as UL Listed and 8' (2.4m) if the heater is labeled as UL/CUL Listed from floor, while heater is at a maximum 30 degrees.
- Adjacent Heaters to be installed no less than 3' (0.9 m) apart.
- Do NOT operate within 25' (7.6m) of flammable/explosive material.
- Never block heater.
- Heaters greater than 240V are for "Commercial Use Only. Risk of fire. Do not use as a residential or household heater."
- A means for disconnection of the appliance must be incorporated in accordance with the local wiring codes.
- Do not use if the heating element is damaged or cracked.

"IMPORTANT INSTRUCTIONS"
"SAVE THESE INSTRUCTIONS"

INSTALLATION INSTRUCTIONS

This heater must be permanently installed and hard wired by a licensed electrician in accordance with local electrical codes. Assembly procedure must be performed with no electrical power to unit.

Step 1: Check UL/CUL/CE label on heater for proper voltage.

Step 2: Follow supplied wiring instructions. (See wiring instructions below)

Step 3: Heater must be mounted with reflector angled down.

Step 4: All electrical connections must be in compliance with the National Electric Code (NEC) and local codes for outdoor wiring.

Step 5: Use only wiring components UL/CUL/CE listed for outdoor use with IPX4 minimum rating.

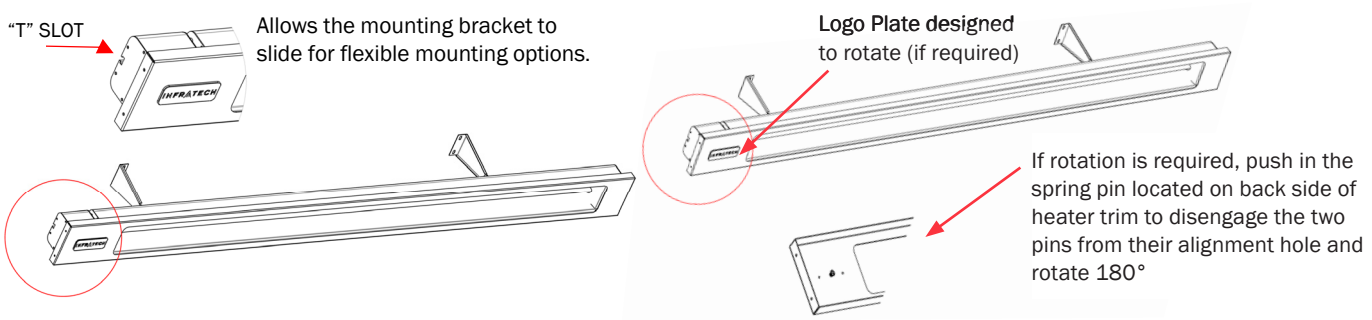

WIRING INSTRUCTIONS

The heater is drilled and threaded for standard ½" conduit fittings. The installing electrician will need to provide the appropriate rigid metallic, flexible or liquid tight conduit for the installation.

- Use only copper or aluminum wire suitable for 90°C.
- Observe local electrical code regulations.

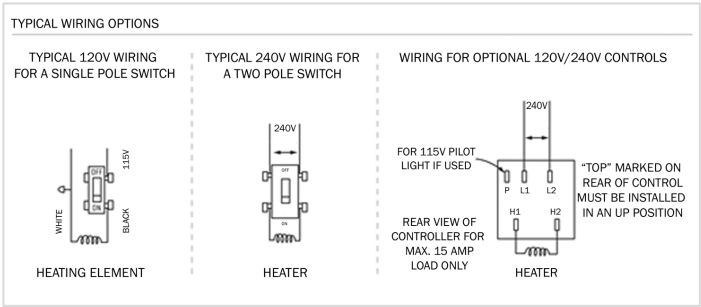

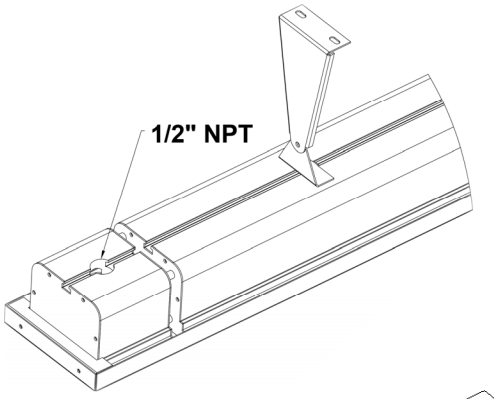

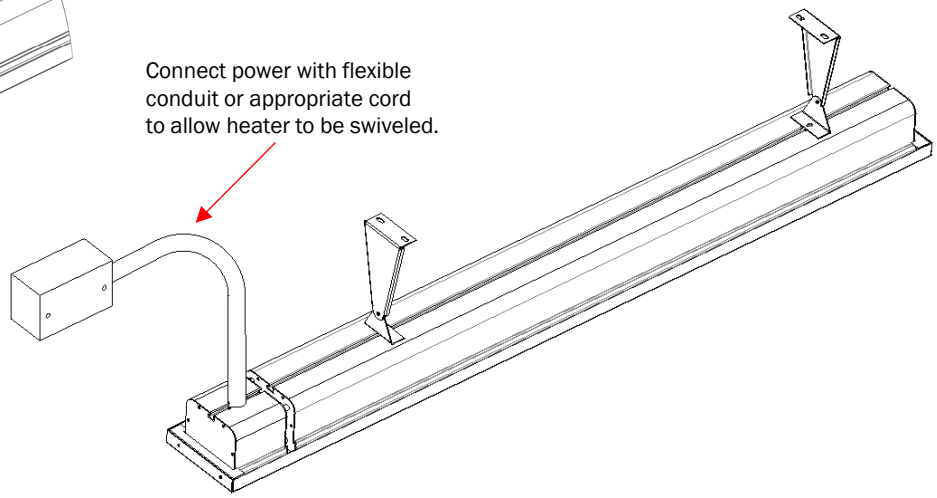

BRACKET SPACING

Adjustable wall/ceiling brackets are furnished with all SL-Series Heaters. Brackets have positive stops at 30° and 45°. Brackets are positioned along a "T" slot on back of unit. You must maintain a minimum distance between the mounting brackets to ensure a stable installation.

MODEL	MIN. SPACING BETWEEN BRACKETS
SL 16XX	12" (30.5cm)
SL 24XX	20" (50.8cm)
SL 30XX	30" (76.2cm)
SL 40XX	30" (76.2cm)

SL-Series Brackets are designed for two positive stop positions. The Heater can be hung in a horizontal position using chains or custom brackets. The Heater must be level, but can be rotated around its horizontal axis.

PRIOR TO INSTALLING HEATERS, PLEASE READ BELOW FOR OPTIONAL MOUNTING ANGLES.

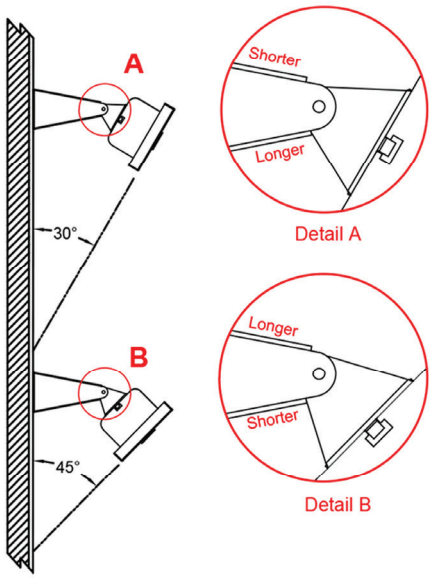

Shallow Angle

For a Shallow Angle Installation (30° off the wall) mount both brackets with the "longer length stop" positioned on the bottom.

Steeper Angle

For a Steeper Angle Installation (45° off the wall) mount both brackets with the "shorter length stop" positioned on the bottom.

MOUNTING INSTRUCTIONS

These models may be chain or bracket mounted to any ceiling or horizontal surface. Installation must be such that 18" (45.7cm) minimum clearance is maintained around the heater on all 4 sides and 36" (.09m) directly in front. A minimum of 6" (15.2cm) of clearance provided by mounting brackets is required behind the plane of the face.

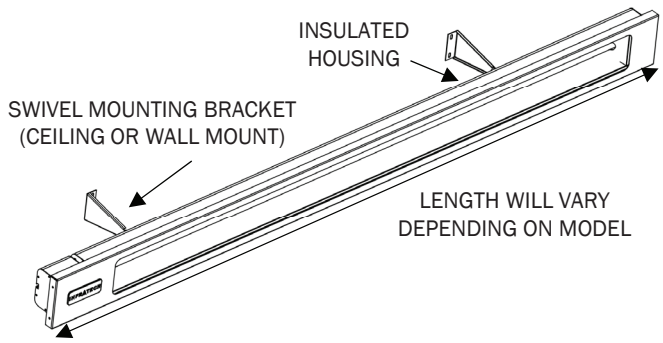

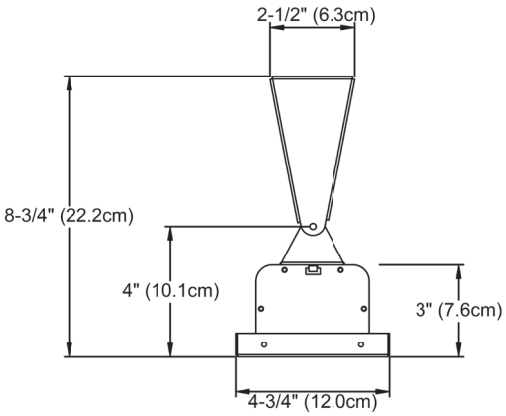

Heater must be installed with the quartz tube horizontally level. For maximum tube life, use a level to find the optimum position for the heater's body. Always maintain the minimum clearances from the heater body to any combustible materials.

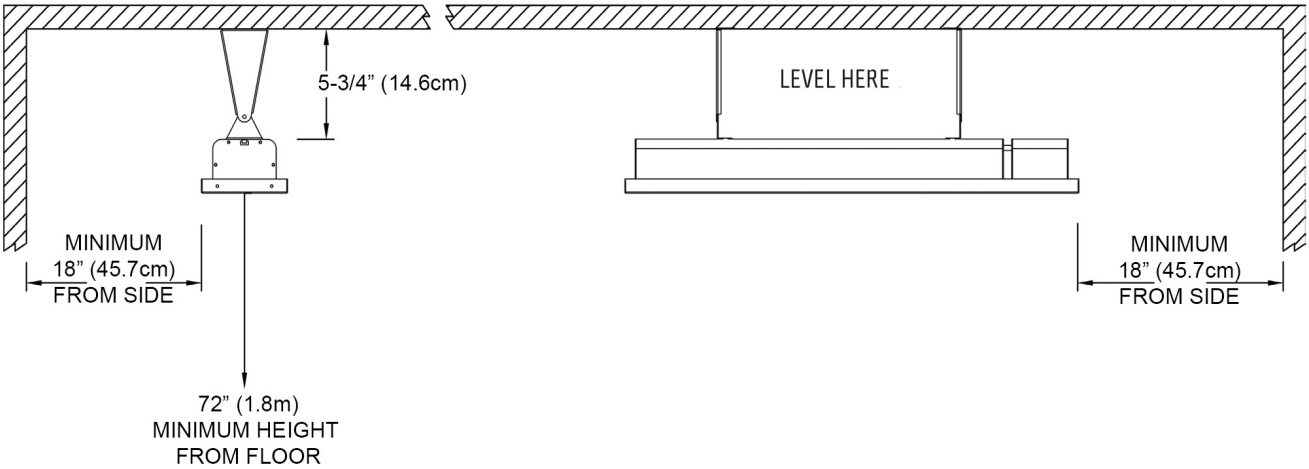

REPLACEMENT ELEMENT INSTALLATION (Visit infratech-usa.com for video instructions)

Disconnect power at the breaker. Remove two screws from one end of trim and slide trim off opposite end. Remove grill by grasping it in the middle, flex grill up and lift it off. Unscrew and remove both end reflectors. Unhook element clips at each end of the heater and remove nuts from end of element to remove the existing quartz tube. Carefully install the new element. Remove one nut from end of the new element. Install wire by sliding high temperature ring terminal onto element screw and replace nut. Use a thin 11/32" wrench to hold inside nut. Nuts must make a tight connection. Close element clips over tube and reinstall end reflectors, and snap protective grill back in, then reinstall trim.

NOTE: Hold ceramic element firmly while tightening nut to prevent damage to element. Nut should be tightened snug. A loose connection can cause the element to short or fail prematurely.

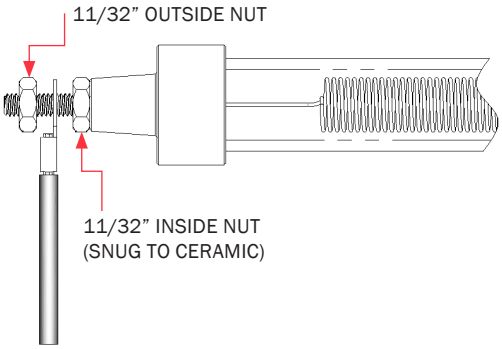

SCAN FOR VIDEO INSTRUCTIONS

REPLACEMENT ELEMENTS

PART#	ELEMENT#	LENGTH	WATTS	VOLTS	FITS MODELS
10-7025	E-1612-SL	22-3/8" (0.6m)	1600	120	SL-1612
10-7030	E-1624-SL	22-3/8" (0.6m)	1600	240	SL-1624
10-7035	E-2424-SL	35-3/8" (0.9m)	2400	240	SL-2424
10-7040	E-2428-SL	35-3/8" (0.9m)	2400	208	SL-2428
10-7055	E-3024-SL	56-3/8" (1.4m)	3000	240	SL-3024
10-7060	E-3028-SL	56-3/8" (1.4m)	3000	208	SL-3028
10-7075	E-4024-SL	56-3/8" (1.4m)	4000	240	SL-4024
10-7080	E-4028-SL	56-3/8" (1.4m)	4000	208	SL-4028

Consult label on back of heater for proper watts, voltage, and replacement part number.

Need help? To order replacement elements for your Infratech heating system, please contact us via phone or visit our website.

REPLACEMENT PARTS

PART #	PART DESCRIPTION	QUANTITY
13-7008	End Reflector (Set of 2)	1
13-7004, 13-7002, 13-7000	Body Reflector Fits - (SL 16), (SL 24), (SL 30/40)	1
13-7034, 13-7032, 13-7030	Lead Wire Set - Fits (SL 16), (SL 24), (SL 30/40)	1
13-7020, 13-7022, 13-7023	Mounting Bracket (Set of 2) (Stainless Steel, Bronze, Black)	1
13-7014, 13-7012, 13-7010	Grill Guard (SL 16), (SL 24), (SL 30/40)	1
13-7028, 13-7026, 13-7024	Stainless Steel Trim (SL 16), (SL 24), (SL 30/40)	1
13-7028BL, 13-7026BL, 13-7024BL	Black Trim (SL 16), (SL 24), (SL 30/40)	1

HEATER COVERAGE AREAS

MODEL	WATTS	MOUNTING HEIGHT		AVERAGE		COLD		PROTECTED	
SL 1624	1,600	6' – 8'	(1.8m - 2.4m)	6' x 6'	(1.8m x 1.8m)	4' x 4'	(1.2m x 1.2m)	8' x 8'	(2.4m x 2.4m)
SL 2424	2,400	7' – 9'	(2.1m - 2.7m)	7' x 7'	(2.1m x 2.1m)	5' x 5'	(1.5m x 1.5m)	9' x 9'	(2.7m x 2.7m)
SL 3024	3,000	7' – 9'	(2.1m - 2.7m)	8' x 8'	(2.4m x 2.4m)	6' x 6'	(1.8m x 1.8m)	10' x 10'	(3.0m x 3.0m)
SL 4024	4,000	8' – 11'	(2.4m - 3.4m)	10' x 10'	(3.0m x 3.0m)	8' x 8'	(2.4m x 2.4m)	12' x 12'	(3.7m x 3.7m)

GENERAL NOTES

INFRATECH QUARTZ TUBE ELECTRIC HEATERS are furnished with wall/ceiling mount swivel brackets. These brackets may be discarded when the heater is hung with chains, or other special bracketing.

See sales literature and price list for full listing of models, descriptions, amperages, and voltages. At times, especially when the mounting height might be quite low, an increased number of smaller heaters can help prevent overheating.

Heaters up to 15 AMPS can be controlled with a simple INF controller. This low cost controller, which is actually an infinite switch, gently pulses the heat on and off at regular intervals when not on full power.

Ideal for comfort heat, the best solution is to heat from two sides rather than from just one side. However, there are times when this is not practical.

Areas covered are approximate dimensions and will vary depending on prevailing and personal comfort levels.

Indoor or well-protected environments will generally exceed average (see charts). Heaters can provide less than average coverage in extremely cold/windy conditions.

MAINTENANCE INSTRUCTIONS

Before performing any maintenance, power must be disconnected and the heater cool to touch.

Heater housing, reflectors, and heating element can be rinsed with a hose or wiped down with isopropyl alcohol, acetone, or glass cleaner. Use a clean, scratch-free rag or paper towel. Any oxidation, surface rust, or discoloration can be removed with a stainless steel cleaner or metal polish on the bare metal surface.

Make sure all water, solvents, or cleaners are removed and the heater is dry before reconnecting the power.

TROUBLESHOOTING

PROBLEM	WHAT TO DO
Heater does not glow	• Check supply voltage to confirm it matches voltage of heating element.
Low heat output Heater	• A 240V element connected to 110V or 208V will warm, but not glow orange or generate sufficient heat for typical applications (Matching your voltage is extremely important). If element is visibly orange, but there is insufficient heat, refer to the areas covered with respect to conditions and mounting heights. • Replace or clean dirty or non-reflective reflectors.
Heater does not work	• Disconnect power and check element with ohm meter for continuity. If there is any continuity across the bulb, the problem is in the wiring/controls. • Check that there is proper voltage to the heater. • Check that the control/switch is working. • Check main power circuit breaker. • Check wiring for a loose connection or burned wire.

LOCATION SUGGESTIONS

Unless heaters are installed over 12' (3.7m) high, it is generally recommended that all radiant heaters be mounted on an angle to assure that radiant warmth is distributed from the sides rather than straight down on the heads and shoulders of the people being warmed.

OUTDOORS

When outdoors, hang heater under protective roof or weather cover whenever possible. Even though heater is all-weather construction, it will last longer and look better if it is protected from rain and snow.

RECOMMENDED POSITIONING

Angle fixture 30° to 60° from horizontal face down. Best angle is approximately 45°.

INSTALLATION DIRECTION

Install fixture to heat the area from the "cold side" if possible. This helps compensate for increased body heat losses due to exposure. Warm floors reradiate heat. Warmer air rises from floor. Some heat reflects from floor.

Mounting a heater directly over a table or other obstruction will block the energy, primarily heating the object. It is best to move heater to the side, allowing complete body and floor coverage.

LIMITED PRODUCT WARRANTY

Model #: _____ Serial #: _____

Date of Purchase: _____ Purchased From: _____

Thank you very much for purchasing a INFRATECH Quartz Tube Electric Heater.
We have designed this heater to provide you and your family with many years of great outdoor experiences. Please fill in the Model and Serial number as well as date of purchase in the areas indicated above. Please save this information for future reference. To get the full and safe enjoyment of your electric heater please read this Owner's Manual carefully and review the proper operating and safety instructions with any family members that may be using the heater.

Manufacturer Warranty:

INFRATECH warrants that this electric heater is designed and manufactured to be free from defects in materials and workmanship for a period of two years from original date of purchase.

Extent of Warranty:

This warranty extends to the selling dealers to the original purchaser at the original site of installation: This warranty becomes valid at the time of purchase and ends either by specified time frame listed above, owner transfer or relocation. In order to activate the warranty we require that you send in the attached warranty registration form. This registration is for our internal use only and will only be used in the event we need to send you important safety related product information. The information will not be sold or used for any marketing related purposes.

Warranty Limitations and Exclusions:

This warranty does not apply to damages resulting from negligence, alteration, misuse, abuse, accident, natural disaster, improper installation or improper operation, unauthorized adjustments or calibrations, dings, dents, scratches, nor damages due to harsh chemicals (i.e. cleaning products improperly applied). Warrantor is not responsible for consequential or incidental damages. Under no circumstances shall INFRATECH or any of its representatives be held liable for injury to any person or damage to any property, however arising.

Important: Please retain original proof of purchase to establish warranty period.

Any implied warranties of merchantability and fitness applicable to the equipment are limited in duration to the period of coverage of this express written warranty. This warranty grants specific legal rights to the purchaser. Other rights, which may vary from state to state, may also apply. Title to the merchandise passes to the consignee upon acceptance by the carrier. After acceptance by the carrier, the merchandise travels at the risk of the purchaser. In the event of freight damage, do not refuse shipment. Advise both the freight agent and the shipper of the damage. Note the details of that damage on the freight bill before any freight charges are paid and file a claim for damages with the freight agent. ©2008 INFRATECH

- CUT HERE -

INFRATECH WARRANTY REGISTRATION

Customer Name: _____

Address: _____

City: _____ State: _____ Zip: _____

Phone: _____ E-mail: _____

Model #: _____ Serial #: _____

Dealer's Name: _____ Date Purchased: _____

Dealer's Address: _____

This Warranty Registration Card must be returned within thirty days of purchase to properly activate your warranty. This information is for our internal use only.

INFRATECH
COMFORT

15700 South Figueroa Street Gardena, CA 90248
TEL 800-421-9455 or 310-354-1250 FAX 310-523-3674 INFRATECH-USA.COM